NIAGARA™
PUMPS THE SMART CHOICE

6”

WF SS Series

6” Rewindable
Water Filled Submersible Motor

50 / 60 Hz

6" WF SS Series

NIAGARA 6" WF SS Submersible Motor specially designed, with the latest manufacturing techniques. Years of experience, superior design and better manufacturing have resulted into development of this range of motor. Which are efficient and reliable in operation. Strict quality assurance during the total process assure trouble free and reliability in operation requiring minimum maintenance.

Applications:

Built for coupling with submersible multistage high and low load thrust 6" pumps for clean water deep well.

Technical Features:

- 6" WF SS Series submersible Motor are Water Lubricated and easily rewindable.
- Winding wire poly propylene with insulation Class-B.
- Motor shaft is of AISI 420 grade or above.
- Corrosion resistant stainless steel Stator Shell.
- Flange and shaft protrusion as per NEMA standard.
- Water lubricated radial and axial thrust bearing.
- Degree of protection: IP 68
- Mounting: vertical/horizontal.
- Dynamically balanced rotor ensure smooth running.
- Solid copper bars inserted in to our piece billet rotor offer great rigidity.
- Pressure Compensation diaphragm.
- Continuous duty.
- Motor cable length: 3m/3core.

Operating limits:

- Maximum allowable rating voltage fluctuation +6%-10%.
- Range: 2.2 Kw to 22.4 Kw(3 to 30 hp)
- Speed: 2900 RPM 50 Hz/ 3500RPM 60 HZ
- Maximum Liquid Temperature :50° C)
- Rotation: Clockwise when viewed from motor end

Versions:

- Three phase 2.2 kw to 22.4 kw, 380-400-415 Volts / 50 Hz.
- Three phase 2.2 kw to 22.4 kw, 230-380-460 Volts / 60 Hz.

50/60 Hz

6” WF SS Motor Exploded View

Sr. No.	Part Name
1	NUT
2	PLAIN WASHER
3	SPRING WASHER
4	STUD
5	RUBBER SEND GUARD
6	S. S. SEND GUARD
7	DRAIN PLUG
8	O - RING
9	OIL SEAL
10	BOLT
11	PLAIN WASHER
12	O - RING
13	CONNACTIVE AISI 304
14	O - RING
15	CARBON BEARING BUSH
16	UPPAR HOUSING
17	STATOR STAMPING
18	END LAMINATION
19	STATOR SHEEL
20	END RING
21	ROTOR ASSEMBLY
22	KEY
23	LOWAR HOUSING
24	COUNTER
25	T. B. PLATE
26	CIRCLIPS
27	THRUST BEARING
28	MOTOR BASE AISI 304
29	ROCKOR SUPPORT
30	DIA PHRAM WITH SPRING
31	BASE PLATE
32	BOLT
33	PLAIN WASHER
34	BOLT
35	PLAIN WASHER
36	ROTOR SHAFT
37	ROTOR STAMPING
38	COPPER ROD
39	COPPER RING
40	BALANCE RING

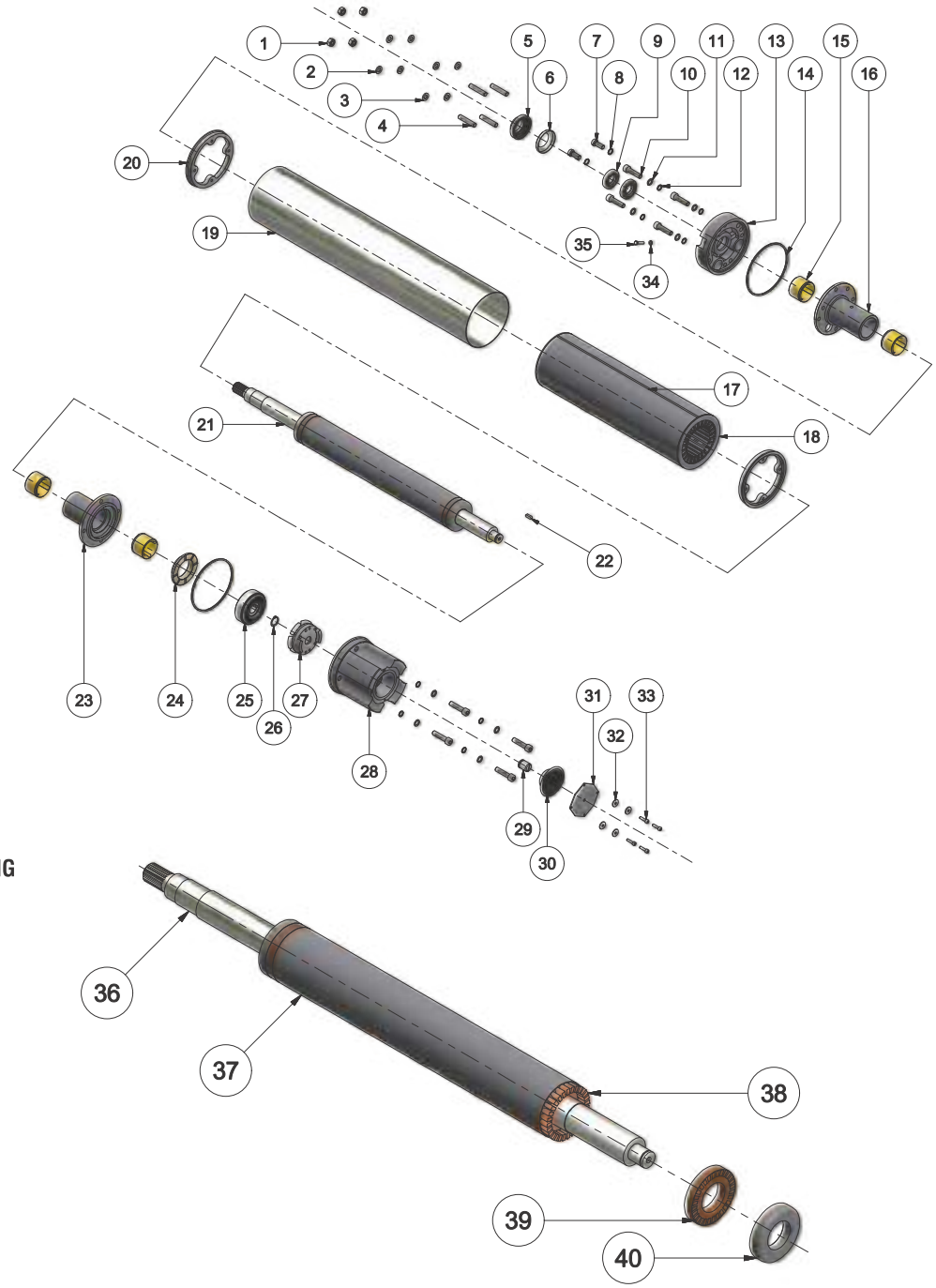

50/60 Hz

6” WF SS Series

6” WF SS Motor Dimensional Drawing

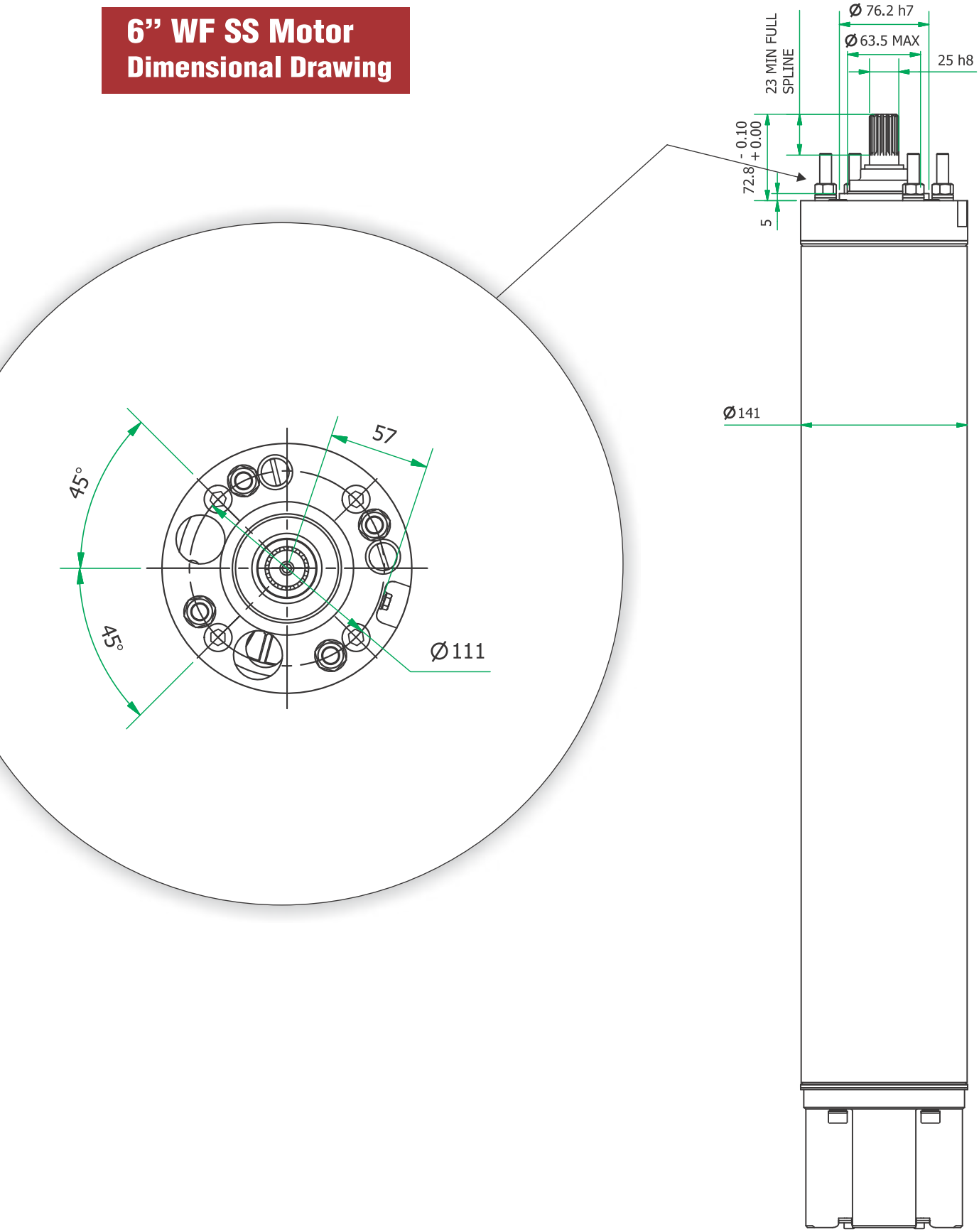

50/60 Hz